Work Order ID 73850

Friday, September 16, 2011 12:48:39 PM

Item ID: D2662-2 **Accept** **Setup Start**

Revision ID: **Stop**

Item Name: Saddle, RH In 206

Start Date: 9/16/2011 **Start Qty:** 10.00 **Cust Item ID:**

Required Date: 10/14/2011 **Req'd Qty:** 10.00 **Customer:**

Reference:

Approvals: **Process Plan:** _____ **Date:** _____ **Tooling:** _____ **Date:** _____ **Run Start**

QC: _____ **Date:** _____ **SPC (Y/N):** _____ **Date:** _____ **Stop**

Sequence ID/ Work Center ID	Operation Description	Set Up/ Run Hours	Tool ID	Tool #	Plan Code	Accept Qty	Reject Qty	Reject Number	Insp. Stamp
Draw Nbr	**Revision Nbr**								
D2662	Rev D								
100	HAAS CNC VERTICAL MACHINING #1	0.00	BA 11/10/03			10	ϕ		
HAAS 1	**Memo**	0.00	RQ 11. 2. 30						
HAAS CNC vertical machine #1	Program part number and batch number.☐Inspect part number and batch number are programmed correctly.☐Fixturing Inspection last completed 11.9.30 by RQ ☐Machine Step No 1 of Folio and inspect per attached Dimension Sheet ☐Machine Step No 2 of Folio								
110	CONVENTIONAL MILLING MACHINE	0.00	RQ 11. 9. 30			10	ϕ		
Mill Conv	**Memo**	0.00	BA 11/10/03						
Conventional Milling Machine	Machine Keyway and inspect per attached dimension sheet								
120	QC2- Inspect parts off machine FAI/FAIB	0.00	RQ 11. 9. 30			10	ϕ		
QC	**Memo**	0.00	BA 11/10/03						
Quality Control									

Dart Aerospace Ltd

W/O:		WORK ORDER CHANGES					
DATE	STEP	PROCEDURE CHANGE	By	Date	Qty	Approval Chief Eng / Prod Mgr	Approval QC Inspector

Part No: _____ **PAR #:** _____ **Fault Category:** _____ **NCR:** Yes No **DQA:** _____ **Date:** _____

Resolution: _____ **Disposition:** _____ **QA: N/C Closed:** _____ **Date:** _____

NCR:		WORK ORDER NON-CONFORMANCE (NCR)						
DATE	STEP	Description of NC Section A	Corrective Action Section B			Verification Section C	Approval Chief Eng	Approval QC Inspector
			Initial Chief Eng	Action Description Chief Eng	Sign & Date			

NOTE: Date & initial all entries

H:\fFORMS\Quality Assurance\approved QA\NCRWO RevE

Work Order ID 73850

Friday, September 16, 2011 12:48:39 PM

Item ID: D2662-2 **Accept** **Setup Start**

Revision ID: **Stop**

Item Name: Saddle, RH In 206

Start Date: 9/16/2011 **Start Qty:** 10.00 **Cust Item ID:**

Required Date: 10/14/2011 **Req'd Qty:** 10.00 **Customer:**

Reference:

Run Start **Stop**

Approvals: **Process Plan:** _____ **Date:** _____ **Tooling:** _____ **Date:** _____

QC: _____ **Date:** _____ **SPC (Y/N):** _____ **Date:** _____

Sequence ID/ Work Center ID	Operation Description	Set Up/ Run Hours	Tool ID	Tool #	Plan Code	Accept Qty	Reject Qty	Reject Number	Insp. Stamp
130	QC8- Inspect parts - second check	0.00 SL 11-10-03				10			
QC	Memo	0.00							
Quality Control									
140	Chemical Conversion Coat per QSI005 4.1	0.00							
HandFinish	Memo	0.00							
Hand Finishing									
150	White Gloss(Ref:4.3.5.1) per QSI005 4.3-Alum	0.00							
Powdercoat	Memo	0.00							
Powder Coating	START TIME: 9:15 ☐FINISH TIME: 9:45 ☐OVEN TEMPERATURE: 320°F								

10X Ø M-f 11/10/04

10X Ø M-f 11/10/06

M118439

Dart Aerospace Ltd

W/O:		WORK ORDER CHANGES					
DATE	STEP	PROCEDURE CHANGE	By	Date	Qty	Approval Chief Eng / Prod Mgr	Approval QC Inspector

Part No: _____ **PAR #:** _____ **Fault Category:** _____ **NCR:** Yes No **DQA:** _____ **Date:** _____

Resolution: _____ **Disposition:** _____ **QA: N/C Closed:** _____ **Date:** _____

NCR:		WORK ORDER NON-CONFORMANCE (NCR)						
DATE	STEP	Description of NC Section A	Corrective Action Section B			Verification Section C	Approval Chief Eng	Approval QC Inspector
			Initial Chief Eng	Action Description Chief Eng	Sign & Date			

NOTE: Date & initial all entries

H:\fFORMS\Quality Assurance\approved QA\NCRWO RevE

Work Order ID 73850

Friday, September 16, 2011 12:48:39 PM

Item ID: D2662-2 **Accept** **Setup Start** **Stop**

Revision ID:

Item Name: Saddle, RH In 206

Start Date: 9/16/2011 **Start Qty:** 10.00 **Cust Item ID:**

Required Date: 10/14/2011 **Req'd Qty:** 10.00 **Customer:**

Reference:

Run Start **Stop**

Approvals: **Process Plan:** _____ **Date:** _____ **Tooling:** _____ **Date:** _____

QC: _____ **Date:** _____ **SPC (Y/N):** _____ **Date:** _____

Sequence ID/ Work Center ID	Operation Description	Set Up/ Run Hours	Tool ID	Tool #	Plan Code	Accept Qty	Reject Qty	Reject Number	Insp. Stamp
160	QC3- Inspect Part Finish	0.00							
QC	Memo	0.00				10	BR	11-10-6	
Quality Control									
170	Identify as per dwg & Stock Location: ST 435	0.00							
Packaging	Memo	0.00				TOA	Sp 11-10-6		
Packaging									
180	QC21- Final Inspection - Work Order Release	0.00							
QC	Memo	0.00					11/10/11		
Quality Control							MF 11-10-06		

Dart Aerospace Ltd

W/O:		WORK ORDER CHANGES					
DATE	STEP	PROCEDURE CHANGE	By	Date	Qty	Approval Chief Eng / Prod Mgr	Approval QC Inspector

Part No: _____ **PAR #:** _____ **Fault Category:** _____ **NCR:** Yes No **DQA:** _____ **Date:** _____

Resolution: _____ **Disposition:** _____ **QA: N/C Closed:** _____ **Date:** _____

NCR:		WORK ORDER NON-CONFORMANCE (NCR)						
DATE	STEP	Description of NC Section A	Corrective Action Section B			Verification Section C	Approval Chief Eng	Approval QC Inspector
			Initial Chief Eng	Action Description Chief Eng	Sign & Date			

NOTE: Date & initial all entries

H:\fFORMS\Quality Assurance\approved QA\NCRWO RevE

Picklist Print

Friday, September 16, 2011 12:48:37 PM

Work Order ID: 73850

Parent Item: D2662-2

Parent Item Name: Saddle, RH In 206

Start Date: 9/16/2011 **Required Date:** 10/14/2011

Start Qty: 10.00 **Required Qty:** 10.00

Comments: IPP: C□00.11.01□Removed P/O for Powder Coat - in house process□EC
IPP Rev:D As per Rev D 07-03-19 JLM □

Component Item ID/ Item Name	Replacement Item ID	Mfg/ Purch	Bin Item	Primary Location	Last Location	Route Seq ID	Unit of Measure	Qty on Hand	Qty per Kit	Total Qty	Qty Issued	Date Issued	Status
D6101-001 Saddle Billet		Manufactured	No			100	Each	49.0000	1	10	11. 9. 30		

Location	Loc Qty	Loc Code
MAT040	49	
64777	20	
66965	1	
69677	2	
70976	10	
72225	16	

7376 S

10

Dart Aerospace Ltd

W/O:		WORK ORDER CHANGES					
DATE	STEP	PROCEDURE CHANGE	By	Date	Qty	Approval Chief Eng / Prod Mgr	Approval QC Inspector

Part No: _____ **PAR #:** _____ **Fault Category:** _____ **NCR:** Yes No **DQA:** _____ **Date:** _____

Resolution: _____ **Disposition:** _____ **QA: N/C Closed:** _____ **Date:** _____

NCR:		WORK ORDER NON-CONFORMANCE (NCR)						
DATE	STEP	Description of NC Section A	Corrective Action Section B			Verification Section C	Approval Chief Eng	Approval QC Inspector
			Initial Chief Eng	Action Description Chief Eng	Sign & Date			

NOTE: Date & initial all entries

H:\fFORMS\Quality Assurance\approved QA\NCRWO RevE

DART AEROSPACE LTD	Work Order:	
Description: 206 Saddle, Inboard, Right side	**Part Number:**	D2662-2
Inspection Dwg: D2662 Rev. D		Page 1 of 1

Inspect dimensions highlighted on inspection sheet drawing D2662 Rev. D and record below:

				Recorded Actual Dimensions					
Dim	**Min**	**Max**	**Go/No Go Gauge**	**1**	**2**	**3**	**4**	**By**	**Date**
A	0.100	0.140		.114	.114	.114	.114	0.111	
B	0.100	0.140		.137	.137	.137	.137	0.138	
C	1.125	1.145		1.141	1.141	1.141	1.141	1.137	
D	0.615	0.685		.685	.685	.685	.685	0.685	
E	0.240	0260		.246	.246	.246	.246	0.246	
F	1.313	1.343		1.324	1.324	1.324	1.324	1.321	
G	0.210	0.230		.220	.220	.220	.220	0.218	
H	0.100	0.180		.131	.131	.131	.131	0.135	
I	2.470	2.510		2.495	2.495	2.495	2.495	2.492	
J	1.565	1.585		1.580	1.580	1.580	1.580	1.578	
K	0.235	0.240		.238	.238	.238	.238	0.238	
L	0.100	0.120		.110	.110	.110	.110	0.115	
M	0.990	1.010		.990	.990	.990	.990	0.990	
N	0.510	0.515		.512	.512	.512	.512	0.513	
O	5.990	6.010		6.000	6.000	6.000	6.000	6.000	
P	1.245	1.255		1.250	1.250	1.250	1.250	1.750	
Q	2.495	2.505		2.500	2.500	2.500	2.500	2.500	
R	0.313	0.318		.315	.315	.315	.315	0.315	
S	0.315	0.322		.317	.317	.317	.317	0.317	
T	2.495	2.505		2.500	2.500	2.500	2.500	2.500	
U	1.357	1.367		1.362	1.362	1.362	1.362	1.362	
V	0.787	0.807		.798	.798	.798	.798	0.798	
W	0.540	0.560		.549	.549	.549	.549	0.550	
X	1.674	1.684		1.680	1.680	1.680	1.680	1.679	
Y	0.257	0.262		.257	.257	.257	.257	0.258	
Z	0.912	0.932		.918	.918	.918	.918	0.921	
AA	0.490	0.510		.497	.497	.497	.497	0.500	
AB	0.178	0.198		.188	.188	.188	.188	0.188	
AC									
AD									
AE									
AF									
Accept/Reject									

Measured by:	RP
Date:	11.9.30

Audited by	[illegible]
Date:	11-10-03

Rev	Date	Change	Revised by	Approved
A		New Issue	RF	
B	99.04.19	Incorporated DSI 9095, DSI 9102 & DSI 9122 Rev. A	RF	
C	99.11.11	Added Dim. R-T	RF	
D	02.12.12	Reformat; Added Dim. U-W & DT8683, DT8686 & DT8695 A/B	KJ/RF	
E	06.07.05	Revised per drawing revision C	KJ/JLM	
F	07.03.21	Revised per drawing revision D	KJ/JLM	

DART AEROSPACE LTD	Work Order:	
Description: 206 Saddle, Inboard, Right side	Part Number:	D2662-2
Inspection Dwg: D2662 Rev. D		Page 1 of 1

Inspect dimensions highlighted on inspection sheet drawing D2662 Rev. D and record below:

				Recorded Actual Dimensions					
Dim	**Min**	**Max**	**Go/No Go Gauge**	#6	#7	#8	#9	#10 By	**Date**
A	0.100	0.140		0.112	0.112	0.115	0.114	0.112	
B	0.100	0.140		0.139	0.138	0.138	0.138	0.138	
C	1.125	1.145		1.138	1.139	1.142	1.143	1.138	
D	0.615	0.685		0.685	0.685	0.685	0.685	0.685	
E	0.240	0260		0.247	0.246	0.245	0.245	0.246	
F	1.313	1.343		1.322	1.322	1.324	1.323	1.322	
G	0.210	0.230		0.220	0.217	0.221	0.220	0.219	
H	0.100	0.180		0.135	0.135	0.135	0.135	0.135	
I	2.470	2.510		2.492	2.492	2.492	2.492	2.492	
J	1.565	1.585		1.580	1.581	1.582	1.581	1.580	
K	0.235	0.240		0.238	0.238	0.238	0.238	0.238	
L	0.100	0.120		0.115	0.115	0.115	0.115	0.115	
M	0.990	1.010		0.990	0.990	0.990	0.990	0.990	
N	0.510	0.515		0.513	0.513	0.513	0.513	0.513	
O	5.990	6.010		6.000	6.000	6.000	6.000	6.000	
P	1.245	1.255		1.250	1.250	1.250	1.250	1.250	
Q	2.495	2.505		2.500	2.500	2.500	2.500	2.500	
R	0.313	0.318		0.315	0.315	0.315	0.315	0.315	
S	0.315	0.322		0.317	0.317	0.317	0.317	0.317	
T	2.495	2.505		2.500	2.500	2.500	2.500	2.500	
U	1.357	1.367		1.362	1.362	1.362	1.362	1.362	
V	0.787	0.807		0.798	0.798	0.798	0.798	0.798	
W	0.540	0.560		0.550	0.550	0.550	0.550	0.550	
X	1.674	1.684		1.679	1.679	1.679	1.679	1.679	
Y	0.257	0.262		0.258	0.258	0.258	0.258	0.258	
Z	0.912	0.932		0.921	0.921	0.921	0.921	0.921	
AA	0.490	0.510		0.499	0.500	0.501	0.502	0.500	
AB	0.178	0.198		0.188	0.188	0.188	0.188	0.188	
AC									
AD									
AE									
AF									
Accept/Reject									

Measured by:	B. A
Date:	11/10/03

Audited by	JL
Date:	11-10-03

Rev	Date	Change	Revised by	Approved
A		New Issue	RF	
B	99.04.19	Incorporated DSI 9095, DSI 9102 & DSI 9122 Rev. A	RF	
C	99.11.11	Added Dim. R-T	RF	
D	02.12.12	Reformat; Added Dim. U-W & DT8683, DT8686 & DT8695 A/B	KJ/RF	
E	06.07.05	Revised per drawing revision C	KJ/JLM	
F	07.03.21	Revised per drawing revision D	KJ/JLM	

DESIGN	DRAWN BY	DART AEROSPACE USA, INC. PORT HADLOCK, WA	
CHECKED PH	APPROVED	DRAWING NO. D2662	REV. D SHEET 1 OF 1
DATE 06.11.08		TITLE SADDLE INSIDE	SCALE 1:3

A	97.03.25	NEW ISSUE
B	97.07.11	ANGLE AND NOTES ADDED
C	06.05.29	INCORP' DEO 9122/9102/9095/9137
D	06.11.08	R0.188 WAS R0.30; ø0.316 WAS ø0.313

RELEASED
07.02.12

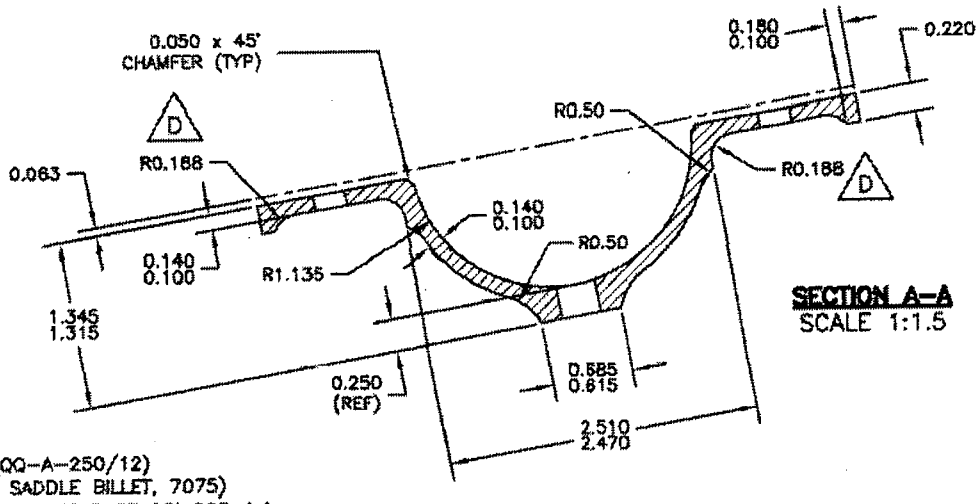

SECTION A–A
SCALE 1:1.5

NOTES:
1) MATERIAL: ALUMINUM 7075–T7351 (QQ–A–250/12)
(MAKE FROM D6101–001 SADDLE BILLET, 7075)
2) FINISH: CHEMICAL CONVERSION COAT PER DART QSI 005 4.1
POWDER COAT GLOSS WHITE (4.3.5.1) PER DART QSI 005 4.3
3) TOLERANCES ARE PER DART QSI 018 UNLESS OTHERWISE NOTED
4) BREAK ALL SHARP EDGES 0.010 TO 0.020
5) ALL DIMENSIONS ARE IN INCHES
6) D2662–1 SHOWN (D2662–2 IS OPPOSITE)

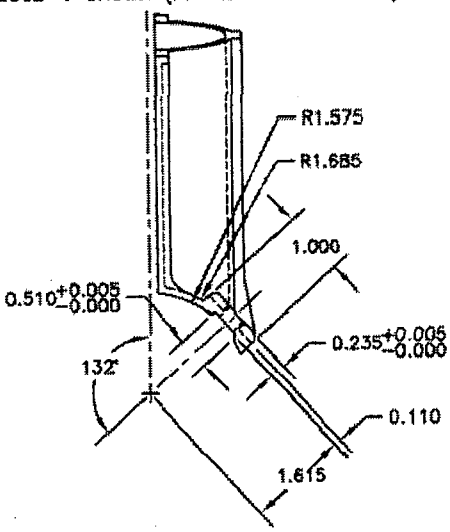

D2662–1 SADDLE INSIDE